9

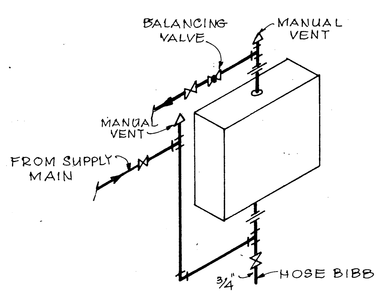

UNIT HEATER HOT WATER PIPING

10

NOTES:
1. PRESSURE GAUGE TEST CONNECTIONS. PROVIDE GAUGES IF REQUIRED BY SPECIFICATIONS.
2. PROVIDE SUFFICIENT SPACE BETWEEN MAIN AND PUMP INLET TO PERMIT REMOVAL OF IMPELLER. FOR PUMPS WITH FLANGE INLET, PROVIDE SPOOL PIECE FOR IMPELLER REMOVAL.

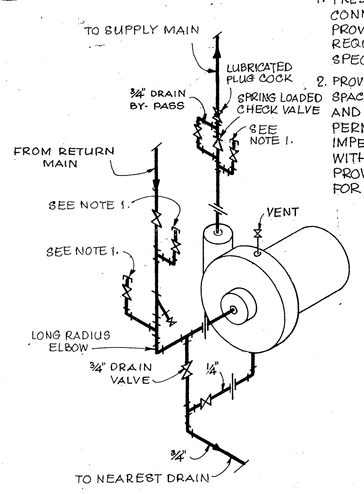

WATER PUMP PIPING END SUCTION PUMP

11

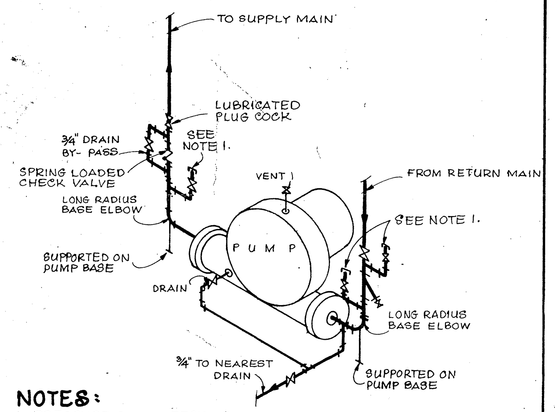

NOTES:
1. PRESSURE GAUGE TEST CONNECTIONS. PROVIDE GAUGES IF REQUIRED BY SPECIFICATIONS.

WATER PUMP PIPING HORIZONTAL SPLIT-CASE

12

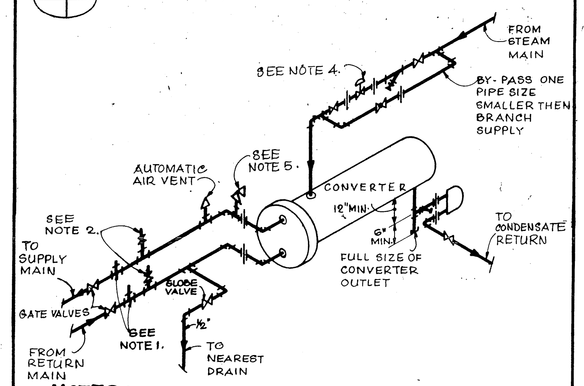

NOTES:
1. SEPARABLE SOCKETS FOR THERMOMETERS. PROVIDE THERMOMETERS IF REQUIRED BY SPECIFICATIONS.
2. PRESSURE GAUGE TEST CONNECTIONS. PROVIDE GAUGES IF REQUIRED BY SPECIFICATIONS.
3. LOCATE BRANCHES AND UNIONS TO CLEAR COIL PULL.
4. NUMBER OF CONTROL VALVES AS PER SPECIFICATIONS.
5. RELIEF VALVE SETTING TO BE 10 PSI BELOW RATING OF PIPING SYSTEM.

HOT WATER CONVERTER PIPING

13

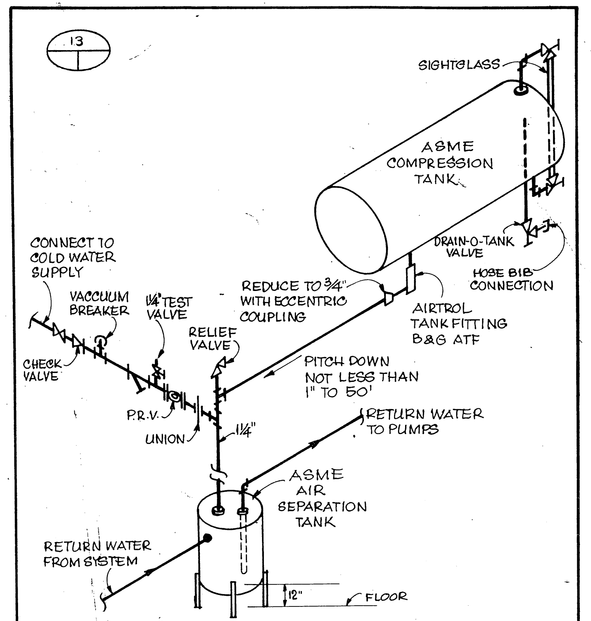

COMPRESSION TANK FOR CLOSED WATER SYSTEM

14

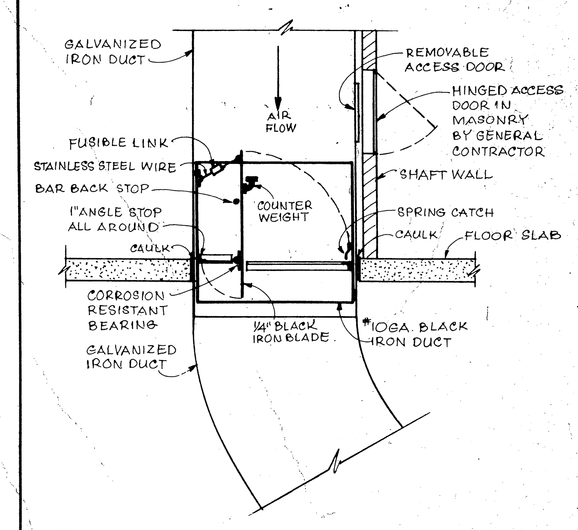

FUSIBLE LINK FIRE DAMPER DETAIL IN FLOOR SLAB

15

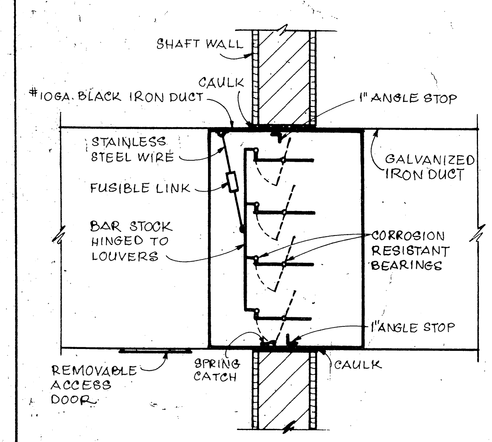

MULTI LOUVERED FUSIBLE LINK FIRE DAMPER DETAIL

16

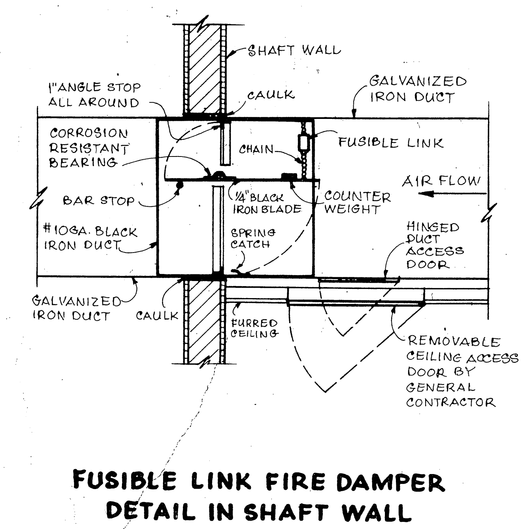

FUSIBLE LINK FIRE DAMPER DETAIL IN SHAFT WALL

17

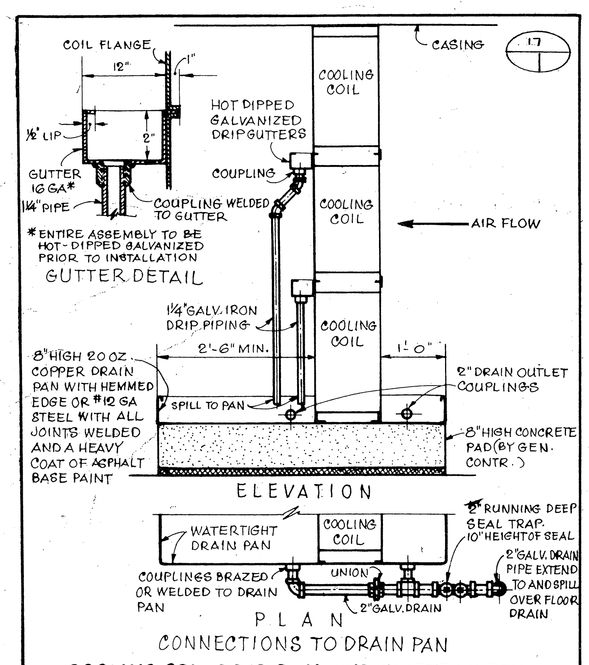

COOLING COIL DRIP PAN AND GUTTER DETAIL

18

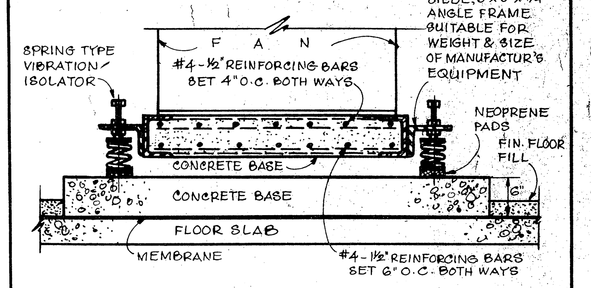

TYPICAL FAN BASE DETAIL WITH INERTIA BLOCK

19

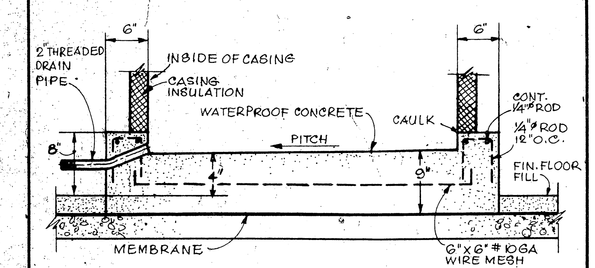

SECTION THRU WIDTH OF BUILT-UP CASING

20

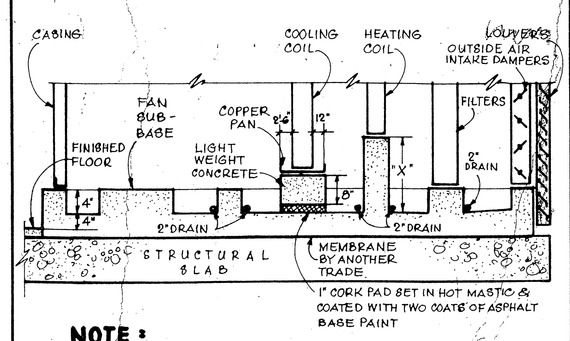

NOTE:
1. OMIT MEMBRANE & CORK PAD FOR INSTALLATION ON GRADE.
2. CONNECT ALL PLENUM DRAINS INTO 2" COMMON HEADER. EXTEND HEADER TO NEAREST FLOOR DRAIN.
3. PITCH ALL PLENUM FLOORS 1" TOWARDS DRAIN PIPES IN BOTH DIRECTIONS.
4. "X" DIMENSION 30" MINIMUM FOR STEAM COILS, 4" OR MORE FOR WATER COILS.
5. IF FAN IS LOCATED OUTOF CASING, DETAIL IS SIMILAR EXCEPT OMIT FAN SUB-BASE.

SECTION THRU LENGTH OF BUILT-UP CASING

number	date	description

STATE UNIVERSITY OF NEW YORK COLLEGE AT
POTSDAM
STATE UNIVERSITY CONSTRUCTION FUND

POTSDAM MUSIC CENTER

EDWARD LARRABEE BARNES FAIA — architects
PETER G. ROLLAND & ASSOCIATES — landscape architects
SEVERUD ASSOCIATES — structural engineers
COSENTINI ASSOCIATES — mechanical engineers
EITINGON & SCHLOSSBERG ASSOCIATES — electrical engineers

STATE UNIVERSITY CONSTRUCTION FUND NEW YORK

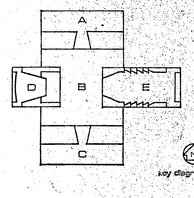

key diagram

project number 1212154

DETAILS

PMC — M-35

scale — date 8-21-70 — drawn A.K.